Stall Fount II - No Heat - GREEN

Part # 18597

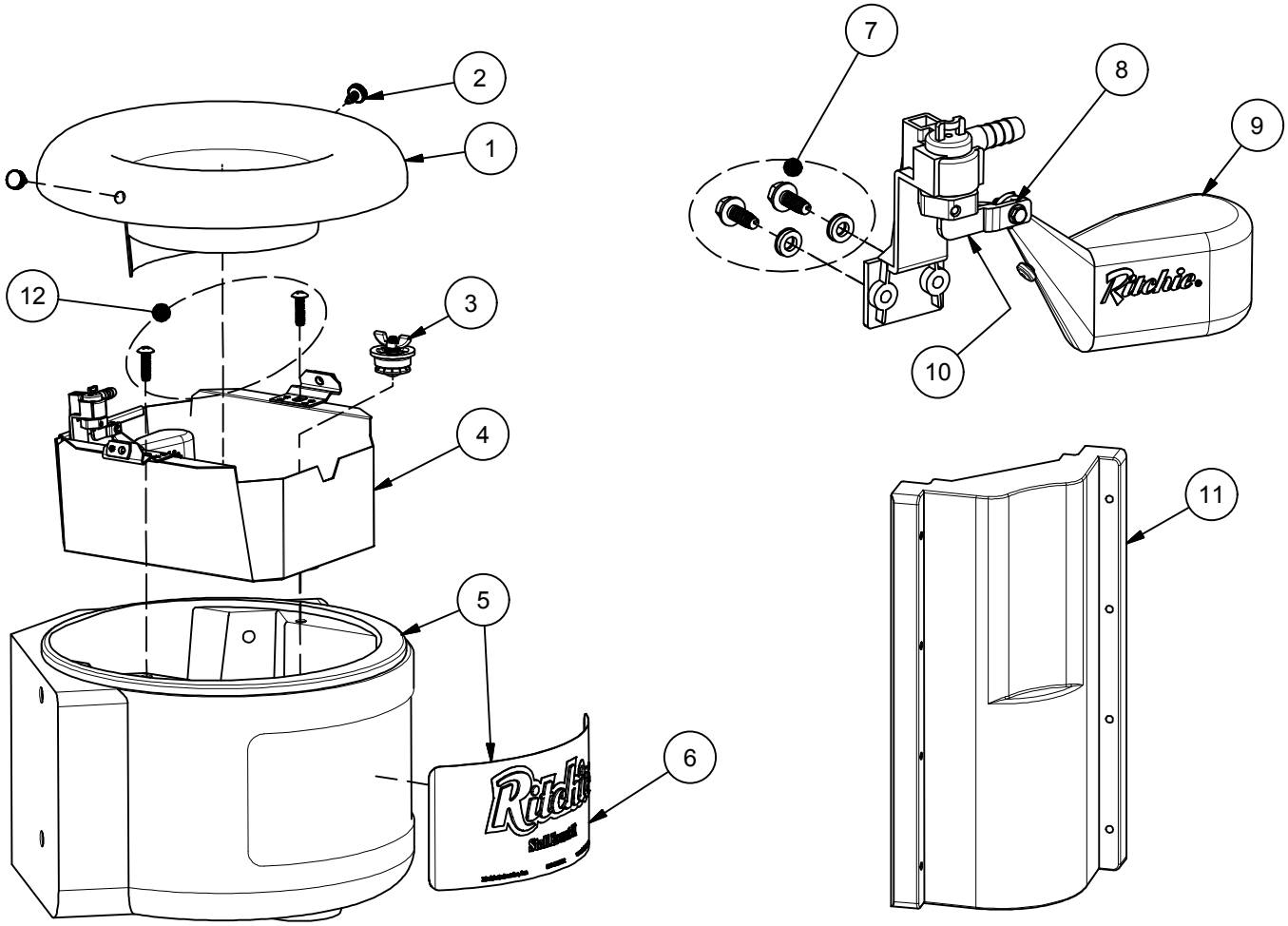

Item	Part #	Description	Qty			Item	Part #	Description	Qty
1	18486	Cover	1			9	18642	Float	1 pkg
2	18494	Screw Pkg - SF2 Cover (2/pkg)	1 pkg			10	13597	Valve Pkg. Green	1 pkg
3	18643	Drain Plug 1 1/2" Adj	1			11	18591	Shroud 30" Green	1
4	18487	Trough (No-Heat)	1				18593	Shroud 20" Green	1
5	18664	Stall Fount II Base w/Label Grn	1			12	18497	Trough HD Screws (2/pkg)	1 pkg
6	18644	Label SFII	1			NS	18613	Hose Barb Fitting	1 pkg
7	18641	Valve Bracket & Screws SF2	1 pkg			NS	15930	Hose Clamp (5/pkg)	1 pkg
8	12576	Wing Nut & Screw	1 pkg			NS	18488	Complete Accessory Pkg.	1 pkg